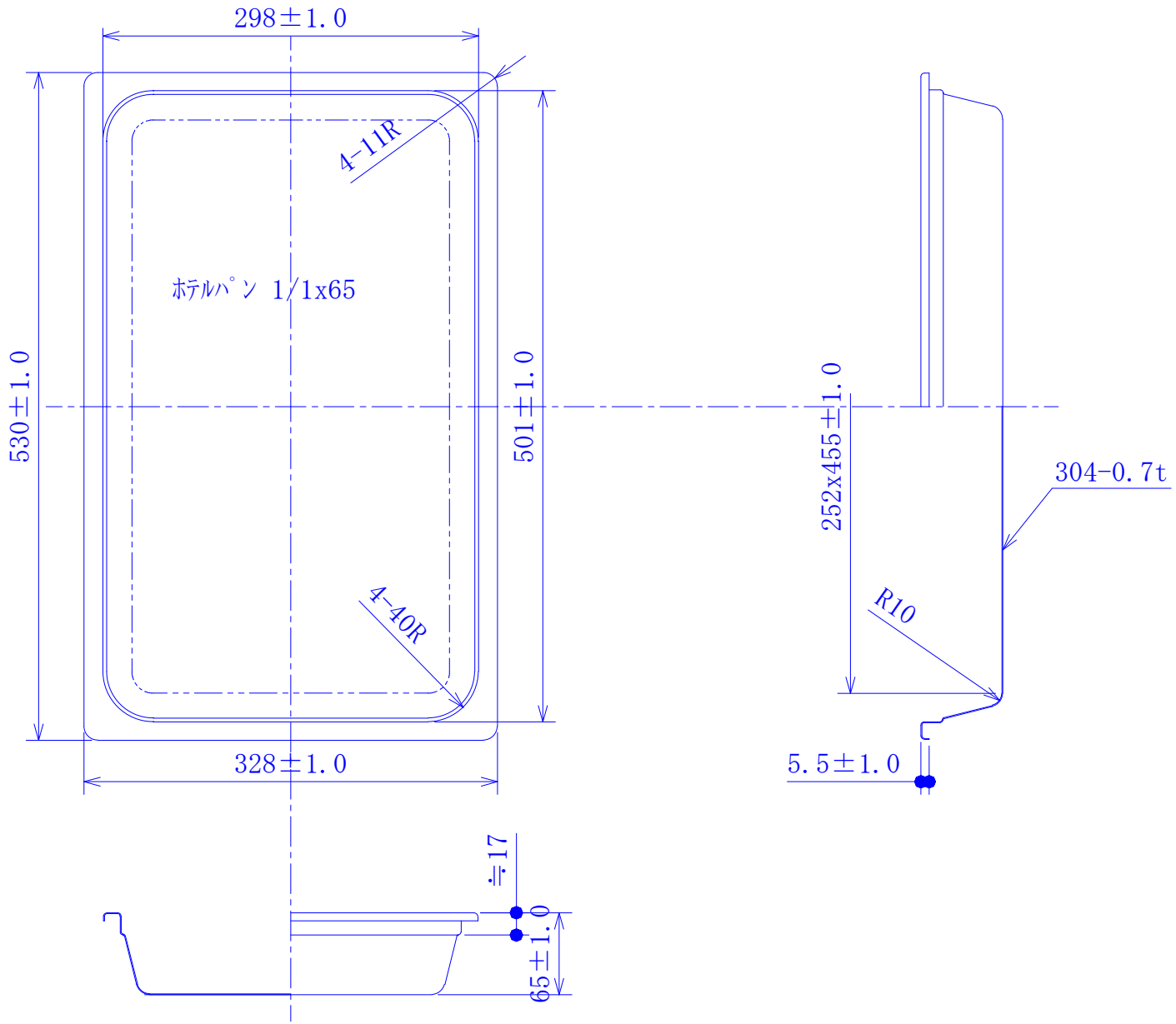
298±1.0
4-11R
ﾎﾃﾙﾊﾟﾝ 1/1x65
530±1.0
501±1.0
4-40R
328±1.0
≒17
65±1.0
252x455±1.0
304-0.7t
R10
5.5±1.0