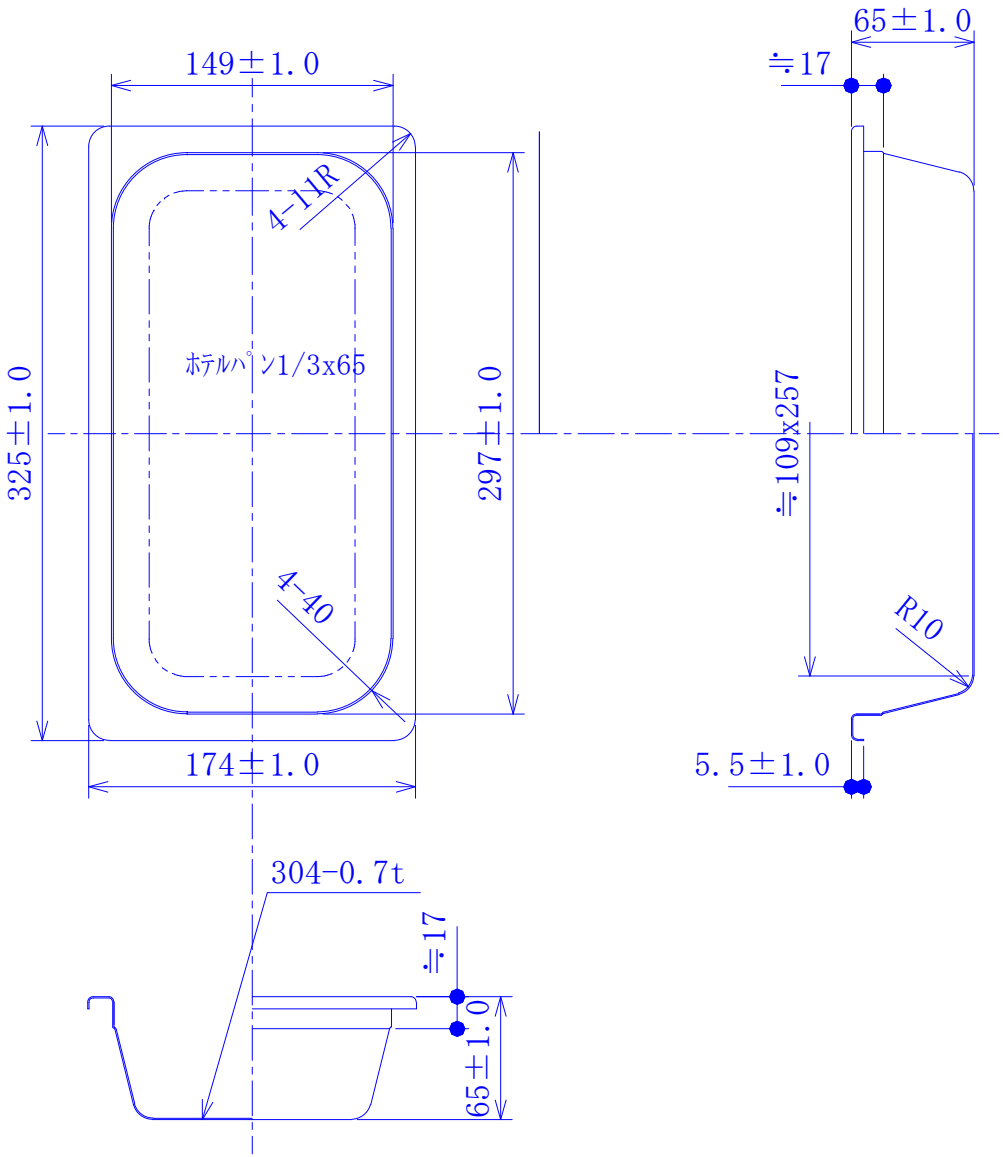
149±1.0
4-11R
ﾎﾃﾙﾊﾟﾝ1/3x65
325±1.0
297±1.0
4-40
174±1.0
65±1.0
≒17
≒109x257
R10
5.5±1.0
304-0.7t
≒17
65±1.0